EDP

Family features:

- Powerful 2-speed motor
- Degree of protection: IP 23
- Operating mode: S1
- Direction of rotation: CCW

	Part number	Pn (Nominal power)	In (Nominal current)	nn (Nominal speed)	Mn (Nominal torque)	Ma (Stall torque)	Gear ratio	Direction of rotation	Signal	Side*	Dimensional drawing (D)	Wiring diagram (W)	Drive end (S)	Connector (C)	Performance curve (P)
		W	A	rpm	Nm	Nm			Hall						
24 V	0 986 337 451	19.3 ; 33.5	3.5 ; 6	23 ; 40	8	120 ; 76	96:2	CCW	No	L	D1	W1	S1	C1	P1

*Gear housing left: L, gear housing right: R

D1

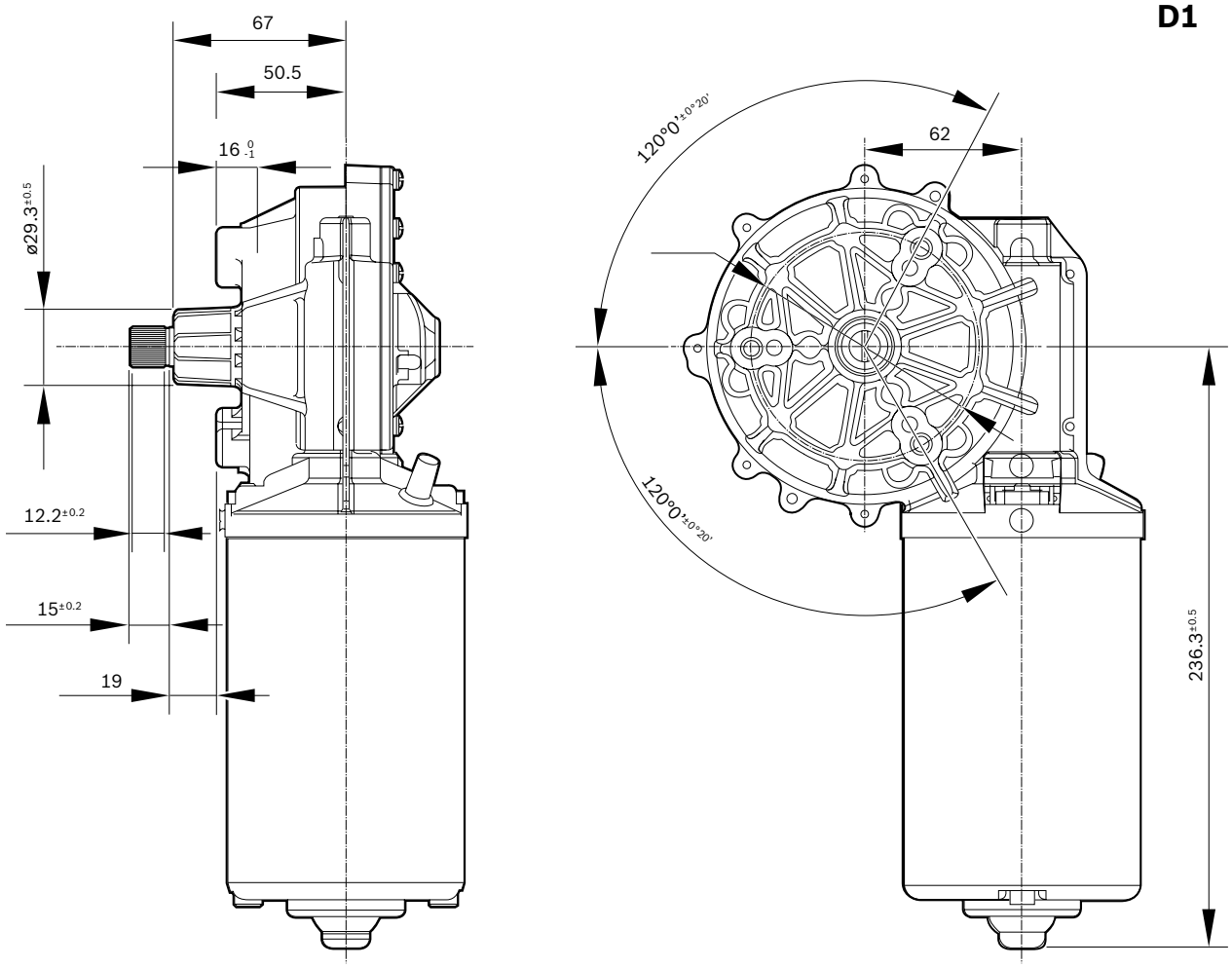

EDP

Wiring diagram (W)

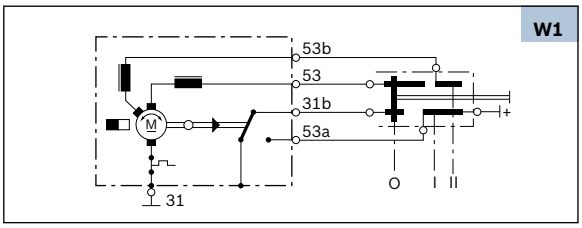

Drive end (S)

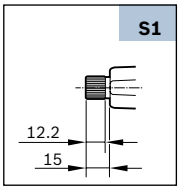

Mating connector (C)

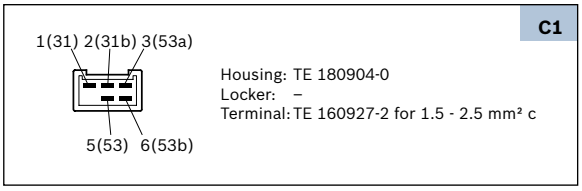
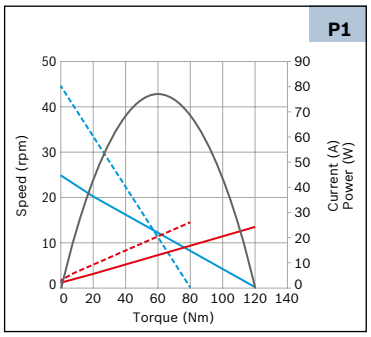
Performance curve (P)